SANWA PUMP - MP Exploded View

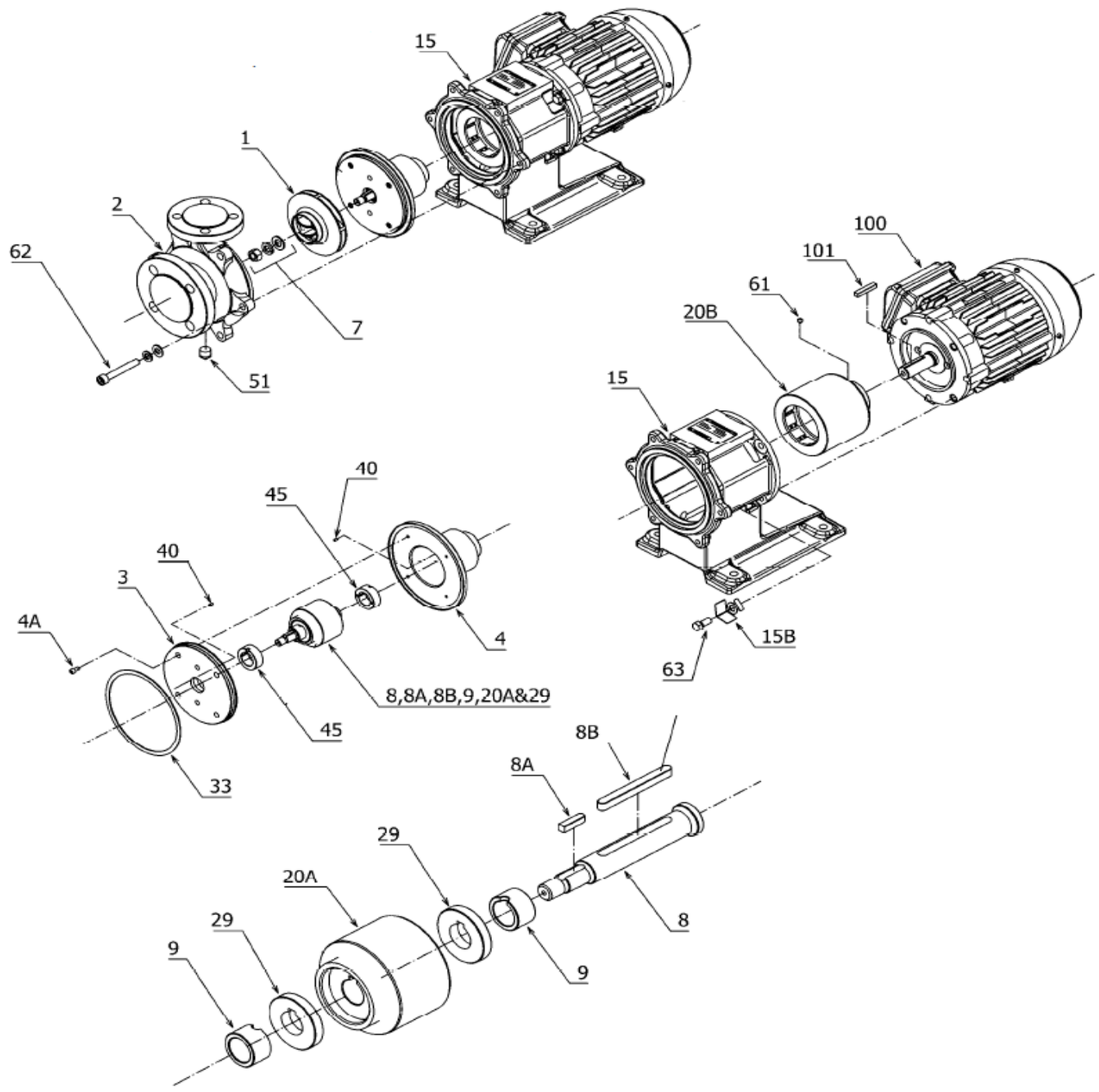

No.	Part	Material	Qty.	Notes
101	Motor Shaft Key	ASTM A575 1045	1	
100	Motor		1	
69	Nameplate	AISI 304	1	
63	Hex Head Stud and Nut (Motor)	AISI 304	4	Size 210 & 220
62	Hex Head Bolt (Casing)	AISI 304	6	Except 210 & 220
61	Set Screw	ASTM A294135	1	
51	Drain Plug	AISI 316	1	
45	Bushing	SiC-D	2	
40	Locking Pin	AISI 316	2	
33	Casing Gasket		1	
29	Thrust Ring	SiC	2	
20B	Magnet	Rare Earth	1	
	Outer Magnet Coupling	ASTM A536 Gr. 60	1	
20A	Magnet	Rare Earth	1	
	Inner Magnet Coupling	AISI 316	1	
15B	Cover	AISI 304	4	Except Frame Size 182/4TC
15	Frame Adaptor	ASTM A48M CLASS, 30B	1	
9	Sleeve	SiC-D	2	
8C	Sleeve Key	AISI 316	1	
8B	Coupling Key	AISI 316	1	
8A	Impeller Key	AISI 316	1	
8	Shaft	AISI 316	1	
7	Impeller Nut	AISI 316L	1	
4A	Head Socket Head Bolt	AISI 316L	4	
4	Rear Casing	AISI 316	1	
3	Case Cover	AISI 316	1	
2	Casing	ACI-CF-8M	1	
1	Impeller	ACI-CF-8M	1	

HOPPING BROOK PARK HOLLISTON, MA 01746-1446 USA
TEL: 508-429-1440 WEB: iwakiamerica.com